Nxtgen Jhaveri Honda

# *Introducing*

# ACTIVA 110

# *Anniversary Edition*

25 Anniversary
Honda Two Wheelers India
2001 - 2025

*Thank You India*



# *Introduction*

Introducing the Honda Activa
25th Anniversary Edition* where unparalleled
reliability meets a fresh new look.
Experience real-time updates, intelligent
features, and a new aesthetic design for a
smooth and enjoyable ride.




*The 25th Annviversary edition is available for Activa 110's Deluxe variant only.

# *Smart design, Stylish presence.*

Make a style statement with your Activa 110's special 25th Anniversary design and stand out in every crowd.




## *Anniversary Graphics and special black chrome*

Featuring a sleek black chrome and an exclusive anniversary graphic on the side panel, allowing you to stand out.

## *25 Year Anniversary Logo*

Aesthetically designed logo on the front of the Activa 110 showcasing 25th Anniversary.




25 Anniversary
Honda Two Wheelers India
2001 - 2025



## *Front and Rear Alloy Wheels*

Upgrade the appearance of your Activa with Pyrite Brown Metallic alloy wheels in brand-new cool colours, which provide enhanced stability and durability.

## *Seat and Inner Panel*

Sophisticated, premium feel, and enhanced appeal with an elegant premium brown seat and inner panel in (Activa 110 Pearl Siren blue) and black seat and inner panel in (Activa 110 Matte Steel Black Metallic).






## *LED Headlamp and Signature LED Position Lamp*

The elegant LED headlamp with a signature position lamp elevates the Activa 110's style to new heights.

## *Striking Tail Lamp*

Grab attention of every viewer and leave a lasting impression with a stylish tail lamp design.



# *Smart Technology*

The Activa110 is packed with cutting-edge smart features and the latest technology to enhance your riding experience.




## *TFT Screen Display*

The Activa's fully loaded meter features a superb display for great daytime and nighttime visibility, with its 10.67cm TFT display, which also provides multi-angle viewing and ensures high image quality. The screen also features three adjustable brightness levels.

## *Idling Stop System*

Activa 110's Idling Stop System optimizes fuel efficiency by intelligently adapting to your riding patterns.



# *Efficiency, Fine Tuned*

The Activa features a TFT meter to monitor fuel consumption, efficiency, and remaining distance during your ride.

## *Live Mileage Indicator*

It displays live fuel efficiency throughout the ride.

## *Average Mileage*

It displays overall fuel consumption during the trip.

## *Range*

It displays the distance you can travel with remaining fuel in the tank.

## *Eco-Indicator*

Tracks real-time driving conditions to maintain fuel efficiency on a real-time basis.



PGM-FI FUEL INJECTION

Intelligent PGM-FI system for optimum air-fuel ratio that provides superior performance, fuel savings, and reliable starts in any weather and lowered emissions.



## *Powerful 110cc Engines*

Top-tier power and acceleration to make rides exciting.

## *Silent Start with ACG*

Experience smooth and silent starts with reduced gear noise and maintenance.

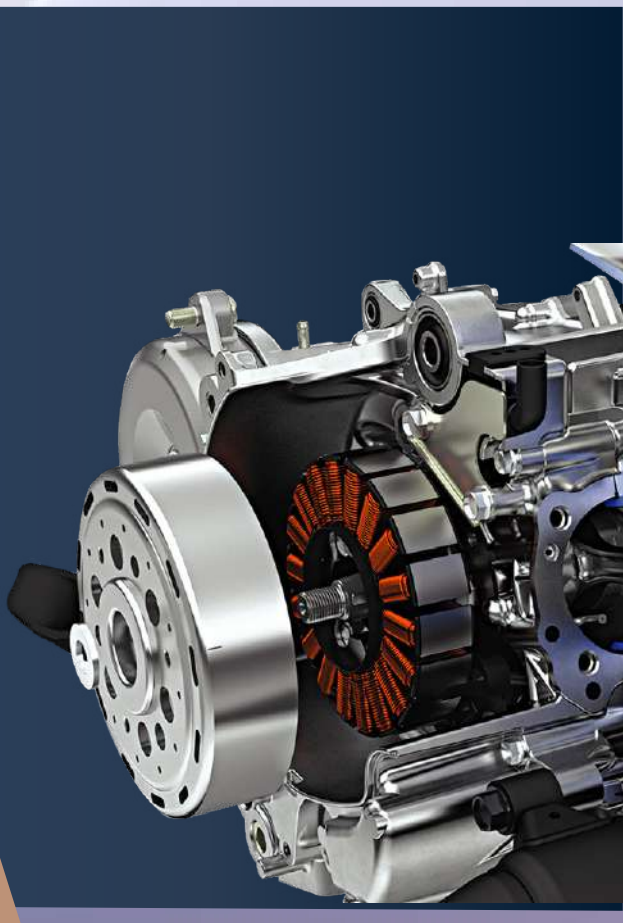

ESP ENHANCED SMART POWER

Experience advanced technology that enhances combustion, performance and fuel efficiency like never before.

# *Reliability & Comfort*

With Honda's ever-trusted legacy, the Activa ensures every ride is smooth, dependable, and comfortable.




## *Open Glove Box*

A spacious open glove box provides extra storage for essentials.



## *15W USB-C Port*

Charge your smartphone, earphones, power bank on-the-go, with all device compatibility.




## *Double Lid External Fuel Fill*

Refuel while seated, thanks to the convenience of double-lid fuel access.



# *Safety*

Supported by Honda's strong legacy, the Activa ensures that every ride is smooth, reliable, and comfortable.



## *Side Stand Engine Cut-Off**

When the side stand is open the side stand engine Cut-off prevents the engine from starting.



## *Telescopic Front Suspension*

Every ride made extra comfortable with telescopic front suspension.

*Side stand shown in the image is not a part of standard fitment in Activa 110cc.



## *Fuel-Efficient Tubeless Tyres*

Enhanced grip, better mileage, and safer rides with Honda's advanced technology.



# *Exclusive colour scheme.*

The 25th Anniversary Activa110 deserves to be noticed. These bold new colours will make heads turn and have you stand out.






# ACTIVA 110

## Anniversary Edition

### Technical Specification+

## Body Dimensions

| | |
|---|---|
| Length | 1833 mm |
| Width | 677 mm |
| Height | 1165 mm |
| Wheel Base | 1260 mm |
| Ground Clearance | 162 mm |
| Seat Length | 692 mm |
| Kerb Weight | Dlx - 106 kg |
| Fuel Tank Capacity | 5.3 L |

## Engine

| | |
|---|---|
| Type | 4 Stroke, SI Engine |
| Displacement | 109.51 cc |
| Max Engine Output | 5.88kW @ 8000 rpm |
| Max Torque | 9.05 Nm @ 5500 rpm |
| Bore X Stroke | 47.10 mm x 63.10 mm |
| Compression Ratio | 10.0:1 |
| Fuel System | PGM - FI |
| Air Filter Type | Viscous Paper Filter |
| Starting Method | Dlx. - Kick/Self |

## Transmission

| | |
|---|---|
| Clutch Type | Automatic (V-Matic) |

## Tyres & Brakes

| | |
|---|---|
| Tyre size & Type (Front) | 90/90-12 54J, Tubeless |
| Tyre size & Type (Rear) | 90/100-10 53J, Tubeless |
| Brake Type & Size (Front) | Drum 130 mm |
| Brake Type & Size (Rear) | Drum 130 mm |

## Frames & Suspensions

| | |
|---|---|
| Frame Type | Under Bone |
| Front Suspension | Telescopic |
| Rear Suspension | 3-Step Adjustable Unit Swing |

## Electricals

| | |
|---|---|
| Battery | 12 V 5.0 Ah (MF) |
| Head Lamp | Dlx. - LED |

+The technical specifications and design of the vehicles may vary according to the requirements and conditions without any notice. All features may not be part of all variants. Terms and conditions apply.


***Honda Motorcycle and Scooter India Pvt. Ltd.***

Registered Office: Plot No. 1 , Sector - 03, IMT Manesar, Distt. Gurugram, (Haryana) – 122050, India



Nxtgen Jhaveri Honda
Shop No. 4, Kanakia Zillion, Next to Kurla Bus Depot, LBS Marg, Kurla (W) Mumbai
Tel: Sales: 9820492650
Mob: Service: 9820163503


**For more details:**

Visit us at: www.honda2wheelersindia.com | Customer Care: customercare@honda.hmsi.in

**Follow us at :**

honda2wheelers.in | honda2wheelerin | honda2wheelersin | honda2wheelerin